STC800

SANY Truck Crane
80 Tons Lifting Capacity

Quality Changes the World

www.sany.com.cn

Superior Lifting Capacity

- Five section, U-type boom. Fully extended length is 50m;
- With an 8m outrigger span and 15.65t of counterweight, the lifting performance is excellent.

Superb Carrier Performance

- For superior roadability, the newly developed carrier has a width of 2.8 meters. The rectangular box frame is wider and built with heavier material to provide superior resistance to bending and torque loads;
- The high horsepower engine, mated to a 10-speed gearbox and a synchro, heavy bearing axle, will tackle a maximum gradient of 44%. Excellent fuel economy at 44L per hundred kilometers.

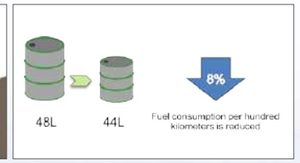

Efficient and Energy-saving Hydraulic System

- Imported oil pump, hoist motor, and load sensing hydraulic system allows precise swing (0.1°/s) and hoist speed (1.5m/min) control. Intelligent flow compensation can smooth the compound movement and enhance the flow usage 20%;
- Compares to hydraulic system, the electronic control system reduces energy consumption by 15% during operation while enhances work efficiency by 30% during heavy load operation;
- The use of an intelligent, pressure and flow compensated hydraulic system allows smooth, predictable multi-function operation with up to a 20% increase in pump flow.

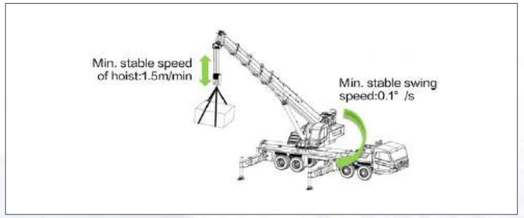

Comfortable and safe operating experience

- Widened operator's cab with 0-20°of tilt makes working at height safer and more comfortable;
- With counterweight remote operation and mechanical structural mount, counterweights can be dropped and stowed on the carrier for safe, short distance transport on the job site;
- Simplified truck hangar facilitating more convenient use and easy maintenance.

50
Fully extended boom length 50m

8
Outrigger span:8m

44
Max. gradient:44%

Overall Dimensions

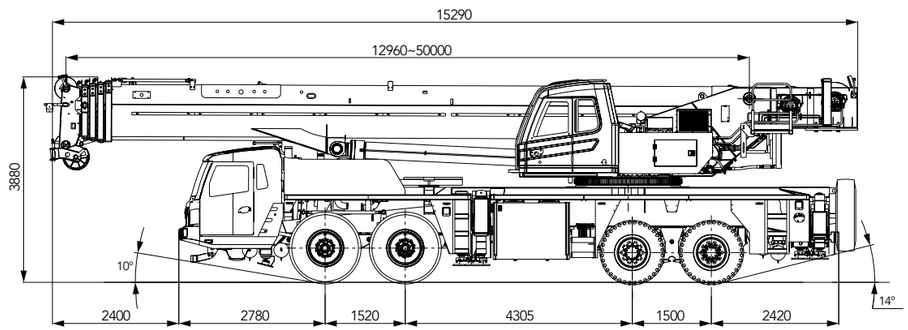

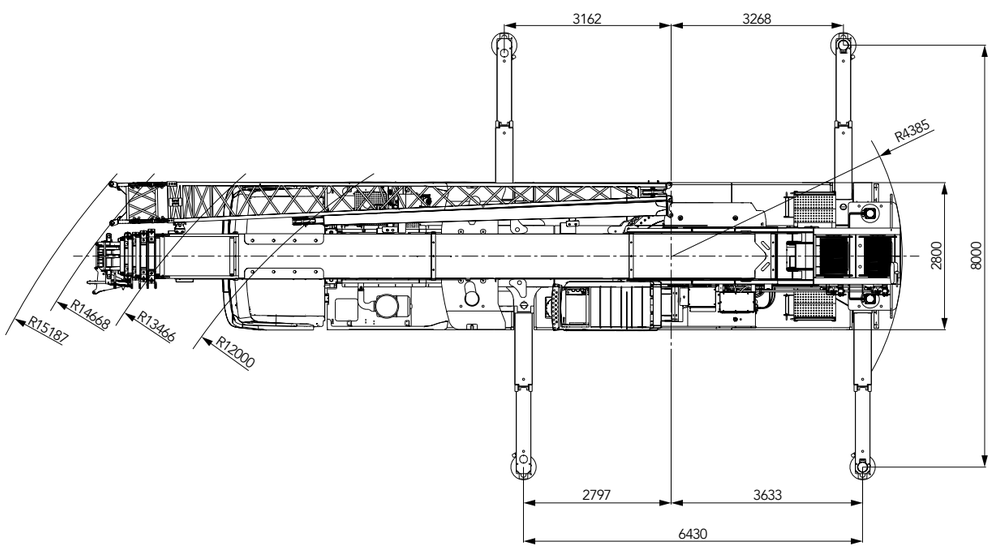

Technical Parameters

Type	Item		Unit	Parameter
Dimensions	Total length of crane		mm	15290
	Total width of crane		mm	2800
	Total height of crane		mm	3880
Weight	Total weight of crane		kg	50000
	Axle load	One and two axle load	kg	24000
		Three and four axle load	kg	26000
Power	Max. engine power		Kw/rpm	276/1900
	Max. engine output torque		N.m/rpm	1800/1000-1400
Travel	Maximum travel speed		Km/h	80
	Min. turning radius		m	12
	Approach angle		°	≥10
	Departure angle		°	≥14
	Max. gradient		%	44
	Fuel consumption per hundred kilometers		l	≤44
Main performance specifications	Max. rated lifting load		t	80
	Maximum turntable swing radius		m	4.385
	Max. lifting torque	Minimum boom length	kN.m	3293
		Maximum boom length	kN.m	1803
	Outrigger span (transverse x longitudinal)		m	8×6.43
	Boom length	Minimum boom length	m	12.96
		Maximum boom length	m	50
		Maximum boom length plus jib	m	67.5
Working speed	Max speed, main hoist, single line, no load		m/min	130
	Max speed, aux hoist, single line, no load		m/min	130
	Boom's full extending/Retracting time		s	140/160
	Boom's full raising/Lowering time		s	65/90
	Swing speed		r/min	0 ~ 1.8

Technical Parameters

Axle Load

Axle	1	2	3	4	Total Weight
Axle load/t	12	12	13	13	50
Remarks	without main or auxiliary hook				

Hook

Lifting Capacity	Pulleys	Ropes	Hook Weight (kg)
80	6	12	750
30	3	6	320
7.5	-	1	160

Main Movement Specifications

Item		Parameter	Diameter/Length of Wire Rope	Max. Tension of Single Strand
Main Hoist		Single line speed 0-130m/min	20mm/250m	6.67t
Auxiliary Hoist		Single line speed 0-130m/min	20mm/145m	6.67t
Slewing		0-1.8r/min		
Raising and lowering radius		65s/90s（0-80°）		
Telescoping		140s/160s（12.96m-50m）		
Outrigger jack	Retracting	35s		
	Extending	35s		
Outrigger beam	Retracting	20s		
	Extending	25s		

Crane Introduction

Carrier

- Sany manufactured four-axle carrier, 8 x 4 x 4 types, stage IV/ stage V of National emission standard engine, 10-speed gearbox.

Crane Frame

- Designed and manufactured by Sany. Introducing the rectangle-section structure. The crane frame is heightened and widened. Rigidity is enhanced by 25%. The capacity is significantly improved over the through-type crane frame.

Outrigger

- H-type outrigger beams with 4-point support. Using fine grained, high strength steel, the fully-hydraulic outriggers offer easy operation. The transverse and longitudinal span of 6.43m x 8m provides excellent stability.

Turntable Structure

- Manufactured with high-strength steel, the box-type frame structure enhances rigidity by 30%. The swing bearing is exceptionally strong and smooth. Its large diameter contributes to enhanced stability.

Hydraulic System

- Load sensing hydraulic system is equipped with a variable displacement piston pump and three gear pumps.

Operating system

- Superstructure swing, boom and hoists are controlled by two electronic proportional handles, engine speed and boom telescope are controlled by pedals while cab tilt and other auxiliary functions are controlled by control panel rocker switches.

Lifting System

- The dual planetary hoist drive is driven by an electronically controlled, variable displacement piston motor. Equipped with a spring applied brake and counterbalance valve to prevent overrun while lowering a load.

Luffing System

- A "power up", "gravity lower" boom luffing system is adopted for enhanced precision and control while lowering the boom with a load.

Slewing System

- An axial piston, fixed displacement motor powers the swing drive. An electronic proportional speed control is used to ensure a smooth braking action.

Operator's Cab

- Developed by Sany. Able to tilt up to 20° , equipped with safety glass, corrosion resistant steel, full-coverage, soft interior trim and panoramic sunroof. A wider interior, high capacity air conditioner and adjustable seat add to the list of operator comfort items while the 10 inch touch screen makes all relevant crane and load information available to the operator at a glance.

Safety Devices

- Equipped with a Sany manufactured, high precision load moment indicator system, anti-two block system, hoist drum third wrap protection, programmable boom height limiter, counterbalance valves on boom and hoists. All load bearing hydraulic cylinders are equipped with lock valves.

Boom Structure

- 5 section boom 12.96m – 50 length, with 17.5m jib. Made of high strength welded structural steel with a U-type cross section. The full power, fully synchronized boom utilizes two hydraulic cylinders along with extend and retract wire ropes.

Counterweight

- 3.15t fixed weight, one 4.7t removable weight (standard configuration) ,two 3.9t removable weights(optional configuration).

Electrical System

- Equipped with two 12 volt maintenance free batteries and a battery disconnect switch. Communication between the carrier and superstructure are via CAN bus.

Boom Operating Range

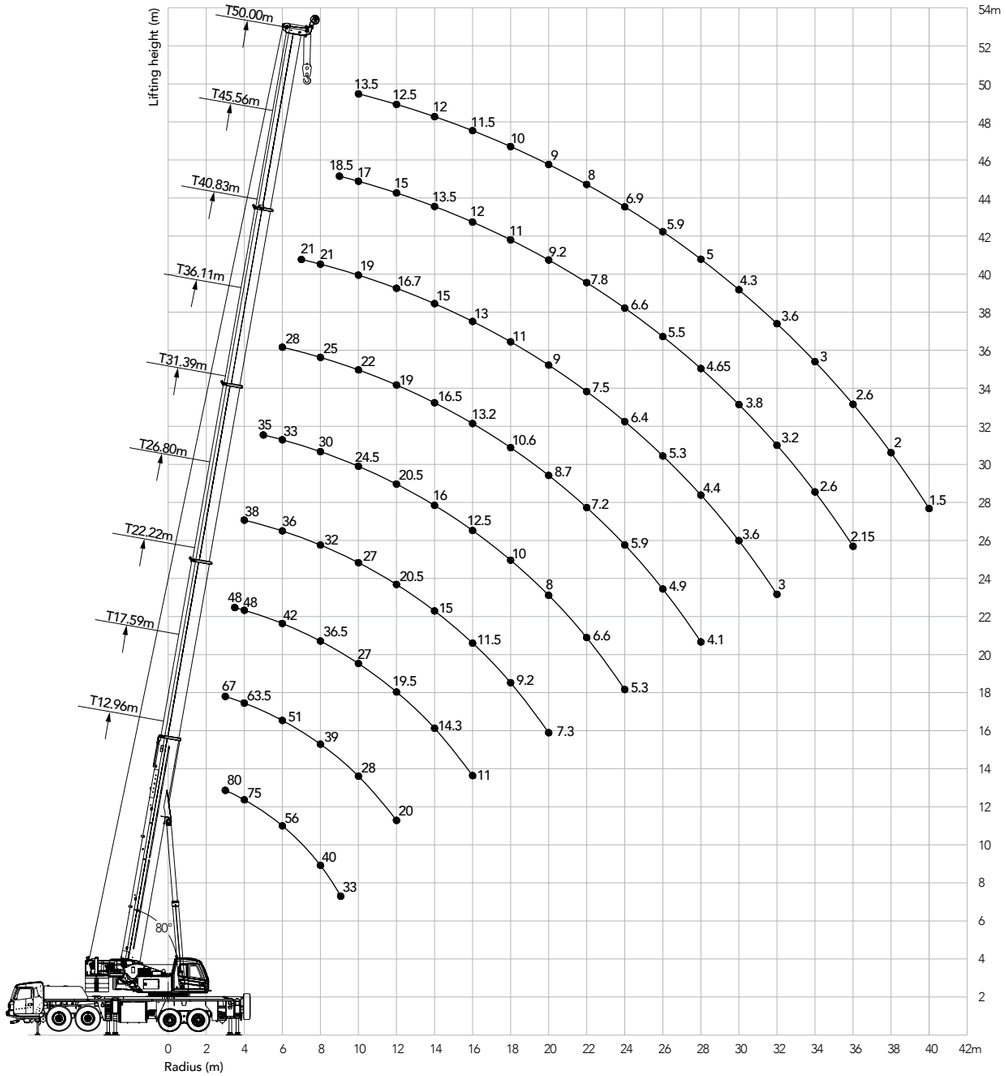

Unit: t

Load Chart

15.65t counterweight, fully extended outrigger, 360° operation

Radius(m)	12.96	17.59	22.22	26.8	31.39	36.11	40.83	45.56	50.00	Radius(m)
3	80	67								3
3.5	77	65	48							3.5
4	75	63.5	48	38						4
4.5	69	61	48	38						4.5
5	63	58	46	38	35					5
5.5	58	53	44	37	35					5.5
6	56	51	42	36	33	28				6
7	46	45	40	34	31	26	21			7
8	40	39	36.5	32	30	25	21			8
9	33	33	32.5	29	27	23	20	18.5		9
10		28	27	27	24.5	22	19	17	13.5	10
11		23	22.5	23.2	22	20	18	16	13	11
12		20	19.5	20.5	20.5	19	16.7	15	12.5	12
14			14.3	15	16	16.5	15	13.5	12	14
16			11	11.5	12.5	13.2	13	12	11.5	16
18				9.2	10	10.6	11	11	10	18
20				7.3	8	8.7	9	9.2	9	20
22					6.6	7.2	7.5	7.8	8	22
24					5.3	5.9	6.4	6.6	6.9	24
26						4.9	5.3	5.5	5.9	26
28						4.1	4.4	4.65	5	28
30							3.6	3.8	4.3	30
32							3	3.2	3.6	32
34								2.6	3	34
36								2.15	2.6	36
38									2	38
40									1.5	40
Parts of line	12	11	8	7	6	5	4	3	3	Parts of line
1# cylinder	0	50	100	100	100	100	100	100	100	1# cylinder
2# cylinder	0	0	0	16.5	33	50	67	84	100	2# cylinder

Jib Operating Range

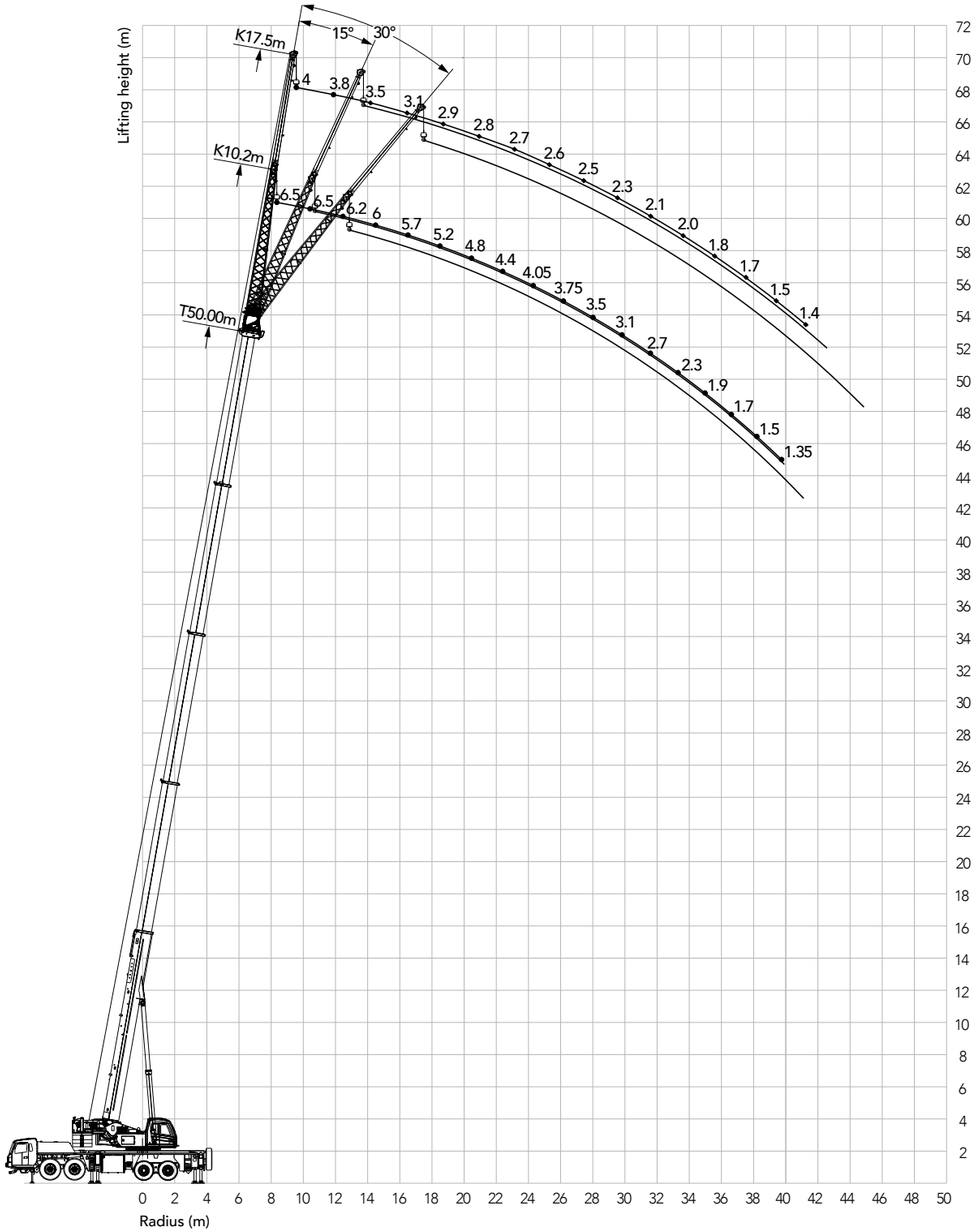

Unit: t

Jib Load Chart

15.65t counterweight, fully extended main boom (m) + jib (m), fully extended outrigger, operation at side or at the back

Working Elevation Angle(°)	50+10.2			50+17.5			Working Elevation Angle(°)
	0°	15°	30°	0°	15°	30°	
80	6.5	5	4.5	4	2.5	1.8	80
78	6.5	5	4.5	3.8	2.2	1.7	78
76	6.2	4.8	4.1	3.5	2	1.6	76
74	6	4.5	3.9	3.1	1.9	1.6	74
72	5.7	4.2	3.7	2.9	1.8	1.5	72
70	5.2	3.9	3.6	2.8	1.8	1.5	70
68	4.8	3.7	3.3	2.7	1.8	1.4	68
66	4.4	3.5	3.1	2.6	1.7	1.3	66
64	4.05	3.3	3	2.5	1.6	1.3	64
62	3.75	3.05	2.9	2.3	1.5	1.3	62
60	3.5	2.9	2.7	2.1	1.5	1.3	60
58	3.1	2.7	2.55	2	1.5	1.2	58
56	2.7	2.4	2.25	1.8	1.4	1.2	56
54	2.3	2.1	2.05	1.7	1.4	1.2	54
52	1.9	1.8	1.75	1.5	1.3	1.2	52
50	1.7	1.6	1.55	1.4			50
48	1.5	1.4	1.3				48
46	1.35						46
Ratio	1						Ratio
Hook	7.5t						Hook

Sany Automobile Hoisting Machinery Co., Ltd.

No.168, Jinzhou Avenue, Jinzhou Development Zone, Changsha, Hunan, China
Zip 410600
Tel 0731-8787 3131 Fax 0731-8403 1999-196
Service 400 887 8318 Consulting 400 887 9318
Email qzjyx@sany.com.cn

— Gent information —

Reminder:
For safe and reliable operation of the diesel engines, please fill Grade IV machines with Grade IV diesel and urea solution conforming to related national standards. Please refer to the operating instructions and related standards for details.

Any change in the technical parameters and configuration due to advancement in technology may occur without prior notice. The machine in the figures may include auxiliary equipment. This brochure is for reference only, and goods in kind shall prevail.
Copyright at Sany Heavy Industry. No part of this catalogue may be copied, recorded or used for any purpose without written approval from Sany Heavy Industry.

© Printed in November 2016 in China

www.sany.com.cn

Instantly scanning for reading more